M50195P

DIGITAL ECHO

DESCRIPTION

The M50195P is a digital ECHO IC fabricated with silicon-gate CMOS technology.

The M50195P converts an input analog signal to a digital signal and writes it in a memory IC. After a delay it reads out the digital signal from the memory IC and then converts to an analog signal again.

Lower noise and distortion delay signal is obtained by M50195P than by BBD. An A-D, D-A converter block formed of ADM (Adaptive Delta Modulation) circuit can produce a low cost delay system.

FEATURES

- Low noise (−90dBV typ)
  Low distortion (0.5% typ)
- 3mode delay time (100, 150, 200msec)

APPLICATION

Karaoke, Radio cassette tape recorder, Video-disc player, Electronic instrument

RECOMMENDED OPERATING CONDITIONS

Supply voltage range ..... 4.0~5.5V
Rated supply voltage 5V

PIN CONFIGURATION (TOP VIEW)

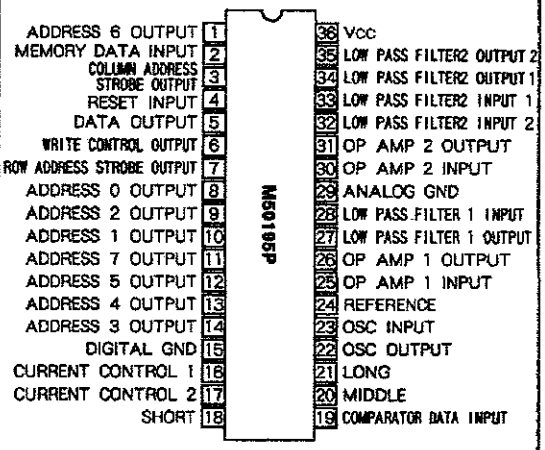

Outline 36P4E

BLOCK DIAGRAM

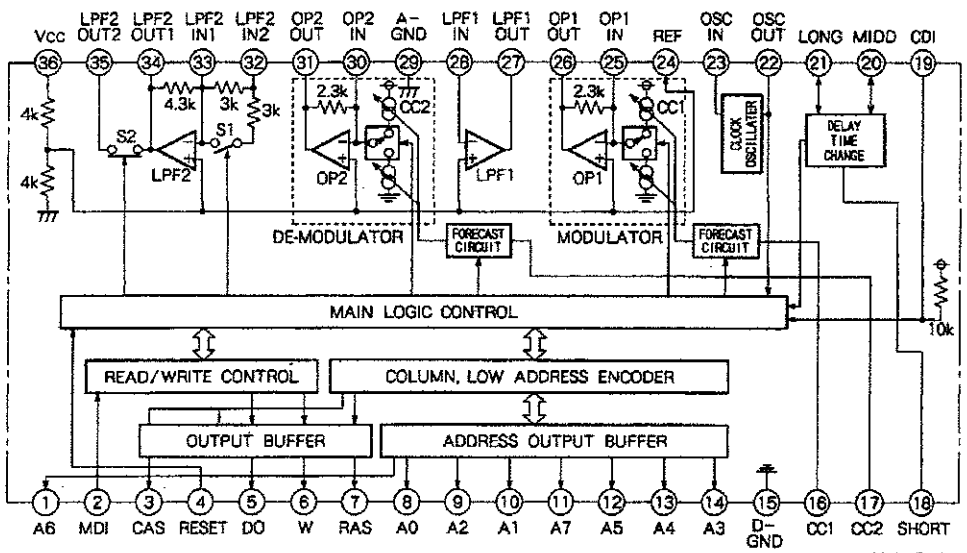

Unit Resistance : Ω

IN FUNCTIONS

Function	Symbol	Function outline
Reference voltage generator	REF	Generates reference voltage of analog circuit (1/2Vcc)
Low pass filter	LPF1, LPF2	Cuts the unnecessary high frequency noise
Adaptive delta modulator	OP1, CC1	Converts analog signal to digital signal
Adaptive delta demodulator	OP2, CC2	Converts digital signal to analog signal
Forecast circuit		Makes the ADM operate the best suited then improves S/N ratio and distortion
Clock generator circuit		Generates the master clock typical frequency fck = 4MHz
Change to delay time switch		3mode delay time can be selected (SHORT = 100msec, MIDD = 150msec, LONG = 200msec)
Change to gain and frequency characteristic switch	S1	Turns on at SHORT mode, and increase gain 6dB than MIDD or LONG mode operation
Change to feedback value	S2	Turns on at SHORT or MIDD mode, and decreases the feedback gain
Main control logic		Controls ADM circuits, delay time and memory IC
Read/write control		Controls reading or writing to the memory IC
Row column address encoder		Selects the address of the memory IC
Output buffer Address output buffer		Drives the memory IC

I/O INTERFACE

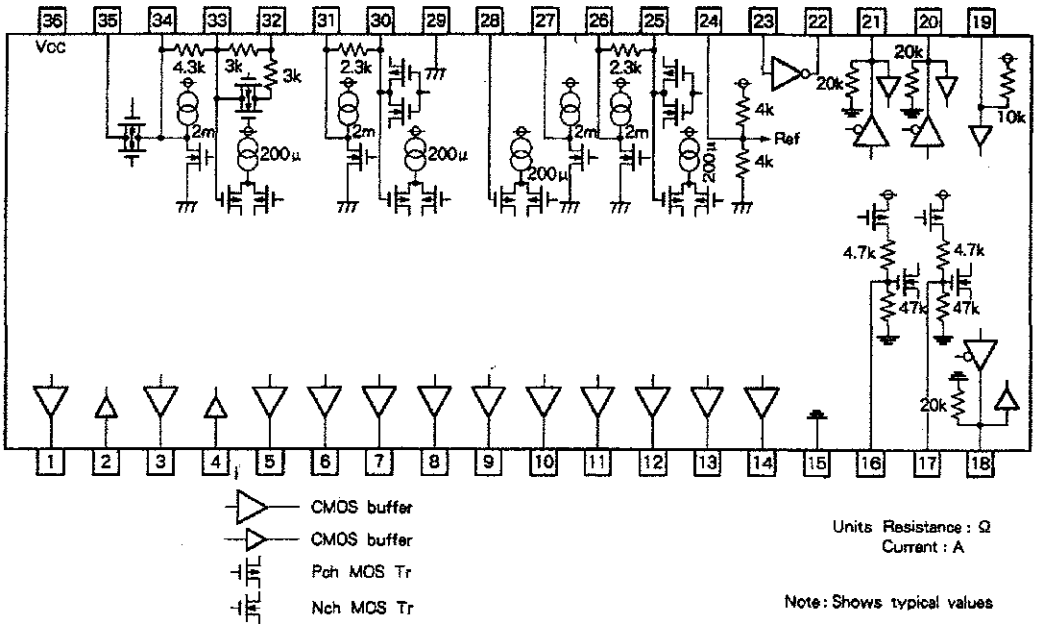

PIN DESCRIPTION

No.	Name	Symbol	Function	Typical output DC voltage
①	ADDRESS 6 OUTPUT	A6	Connects to A6 (Address input 6) terminal of memory IC	5VP-o
②	MEMORY DATA INPUT	MD1	Connects to Q (Data input) terminal of memory IC	–
③	COLUMN ADDRESS STROBE OUTPUT	CAS	Connects to CAS (Column Address Strobe input) terminal of memory IC	5VP-o
④	RESET INPUT	RESET	Reset operated at the L level	–
⑤	DATA OUTPUT	DO	Connects to D (Data input) terminal of memory IC	5VP-o
⑥	WRITE CONTROL OUTPUT	W	Connects to W (Write control input) terminal of memory IC	
⑦	ROW ADDRESS STROBE OUTPUT	RAS	Connects to RAS (Row Address Strobe input) terminal of memory IC	
⑧	ADDRESS 0 OUTPUT	A0	Connects to A0 terminal of memory IC	
⑨	ADDRESS 2 OUTPUT	A2	Connects to A2 terminal of memory IC	
⑩	ADDRESS 1 OUTPUT	A1	Connects to A1 terminal of memory IC	
⑪	ADDRESS 7 OUTPUT	A7	Connects to A7 terminal of memory IC	
⑫	ADDRESS 5 OUTPUT	A5	Connects to A5 terminal of memory IC	
⑬	ADDRESS 4 OUTPUT	A4	Connects to A4 terminal of memory IC	
⑭	ADDRESS 3 OUTPUT	A3	Connects to A3 terminal of memory IC	
⑮	DIGITAL GND	D – GND	Connects to analog GND at one point	0V
⑯	CURRENT CONTROL 1	CC1		0.7V (Quiescent)
⑰	CURRENT CONTROL 2	CC2		
⑱	SHORT	SHORT	Delay time T_d = 100msec, output current for indicator I_o = 5mA typ	5V(S) 0V(M, L)
⑲	COMPARATOR DATA INPUT	CD1	Connects to comparator output C	–
⑳	MIDDLE	MIDD	Delay time T_d = 150msec, output current for indicator I_o = 5mA typ	5V(M) 0V(S, L)
㉑	LONG	LONG	Delay time T_d = 200msec, output current for indicator I_o = 5mA typ	5V(L) 0V(S, M)
㉒	OSC OUTPUT	OSC OUT	Connects to the 4MHz ceramic filter	5VP-o
㉓	OSC INPUT	OSC IN	Connects to the 4MHz ceramic filter or input an external clock	–
㉔	REFERENCE	REF	= 1/2Vcc	2.5V
㉕	OP AMP 1 INPUT	OP1 IN	Forms integrator with external C	2.5V
㉖	OP AMP 1 OUTPUT	OP1 OUT		2.5V
㉗	LOW PASS FILTER 1 OUTPUT	LPF1 OUT	Forms the second order low pass filter with external C,R	2.5V
㉘	LOW PASS FILTER 1 INPUT	LPF1 IN		2.5V
㉙	ANALOG GND	A – GND		0V
㉚	OP AMP 2 INPUT	OP2 IN	Forms integrator with external C	2.5V
㉛	OP AMP 2 OUTPUT	OP2 OUT		2.5V
㉜	LOW PASS FILTER 2 INPUT 2	LPF2 IN2	Forms the low pass filter with external C and the high pass filter with external C	2.5V
㉝	LOW PASS FILTER 2 INPUT 1	LPF2 IN1		2.5V
㉞	LOW PASS FILTER 2 OUTPUT 1	LPF2 OUT1		2.5V
㉟	LOW PASS FILTER 2 OUTPUT 2	LPF2 OUT2		2.5V
㊱	Vcc	Vcc	Supply voltage 4~5.5V (5V typ)	–

ABSOLUTE MAXIMUM RATINGS (Ta = 25℃, unless otherwise noted)

Symbol	Parameter	Conditions	Ratings	Unit
Vcc	Supply voltage		7	V
Icc	Circuit current		70	mA
Pd	Power dissipation		1100	mW
Topr	Operating temperature		−20~+75	℃
Tstg	Storage temperature		−40~+125	℃

RECOMMENDED OPERATING CONDITIONS

Symbol	Parameter	Conditions	Limits			Unit
			Min	Typ	Max	
Vcc	Supply voltage		4	5	5.5	V
fck	Clock frequency			4		MHz
VIH	High input voltage	MD1, Reset, CD1, SHORT, MIDD, LONG	Vcc×0.8	Vcc	Vcc	V
VIL	Low input voltage	MD1, Reset, CD1	0	0	Vcc×0.2	V
CM	Load capacitance	A0~A7, RAS, CAS, DO, W			10	pF

ELECTRICAL CHARACTERISTICS (Ta = 25℃, unless otherwise noted)

Symbol	Parameter	Test conditions		Limits			Unit
				Min	Typ	Max	
Icco	Circuit Current	Quiescent			15		mA
Gvs	Voltage gain	SHORT			11		dB
GvM		MIDD			5		dB
GvL		LONG			5		dB
TdS	Delay time	SHORT			98.3		ms
TdM		MIDD			147.5		ms
TdL		LONG			196.6		ms
Vomax	Maximum output voltage	SHORT	THD = 3%		1.7		Vrms
		MIDD, LONG			1.1		
THD	Output distortion	SHORT Vo = 1Vrms			0.4		%
No	Output noise voltage	SHORT	Rg = 50 Ω DIN-AUDIO		−89		dBV
		MIDD, LONG			−93		
SVRR	Supply voltage rejection ratio	ΔVcc = −20dBv, 100Hz			−40		dB

TYPICAL CHARACTERISTICS

THERMAL DERATING (MAXIMUM RATING)

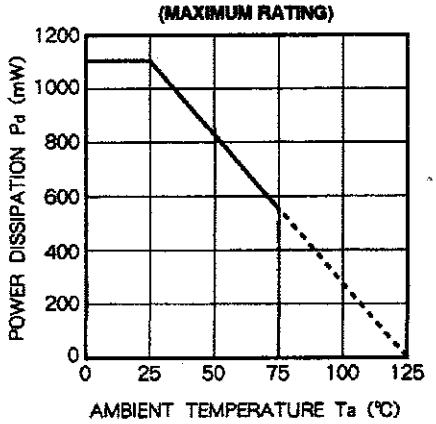

CIRCUIT CURRENT VS. SUPPLY VOLTAGE

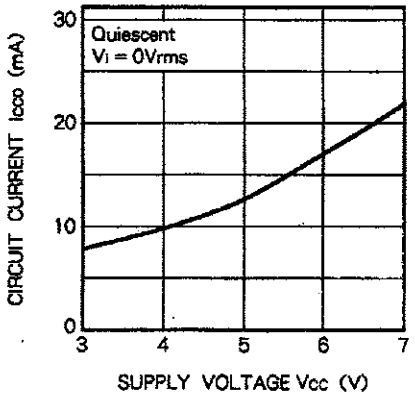

VOLTAGE GAIN VS. FREQUENCY

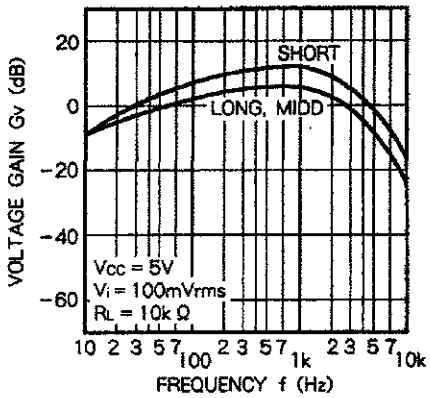

TOTAL HARMONIC DISTORTION VS. FREQUENCY

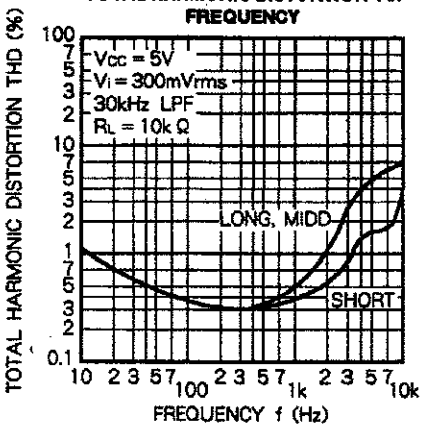

TOTAL HARMONIC DISTORTION VS. OUTPUT VOLTAGE

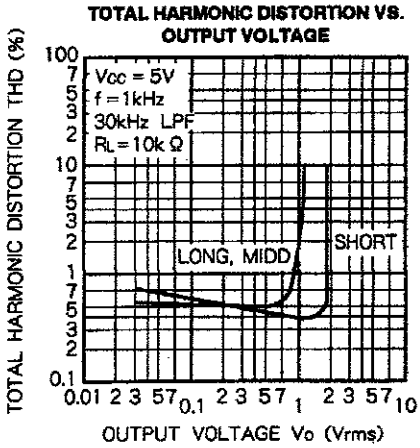

MAXIMUM OUTPUT VOLTAGE VS. LOAD RESISTANCE

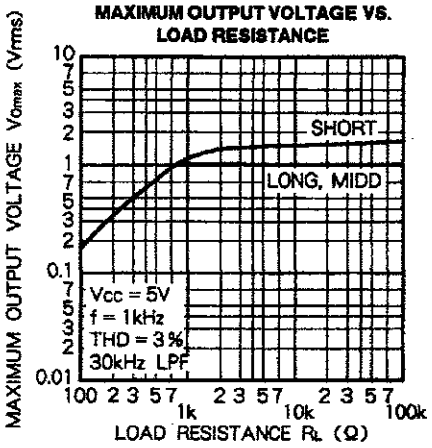

TOTAL HARMONIC DISTORTION VS. SUPPLY VOLTAGE

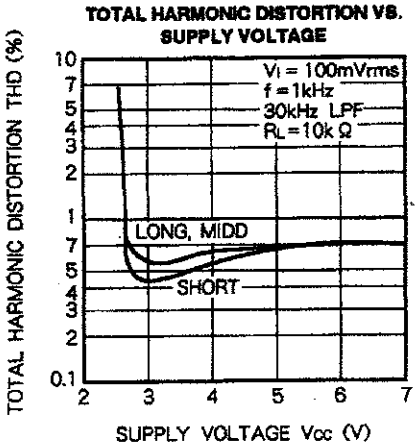

OUTPUT NOISE VOLTAGE VS. SUPPLY VOLTAGE

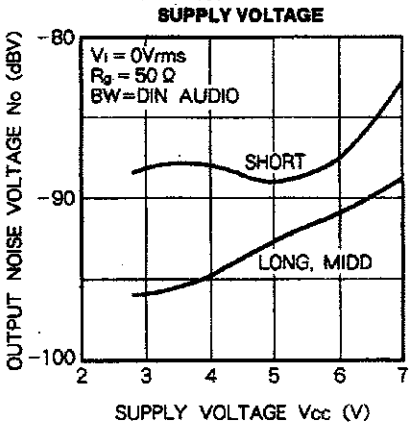

MAXIMUM OUTPUT VOLTAGE VS. SUPPLY VOLTAGE

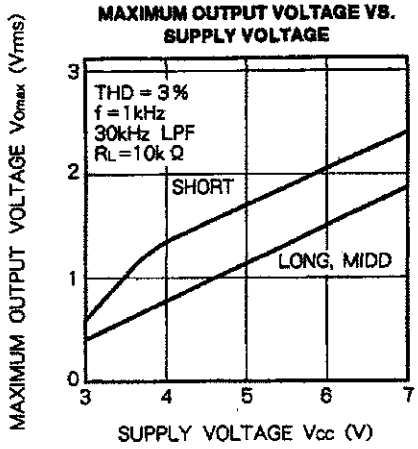

VOLTAGE GAIN VS. SUPPLY VOLTAGE

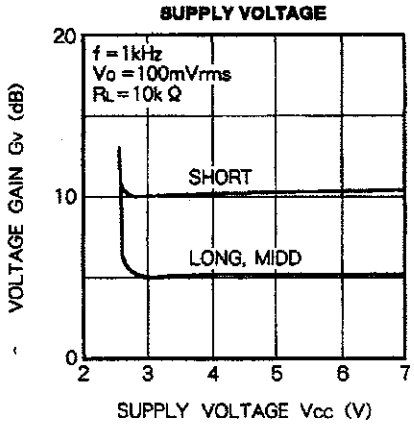

SUPPLY VOLTAGE REJECTION RATIO VS. SUPPLY VOLTAGE

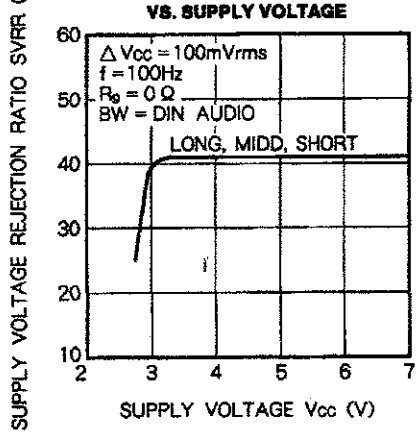

APPLICATION CIRCUIT EXAMPLE

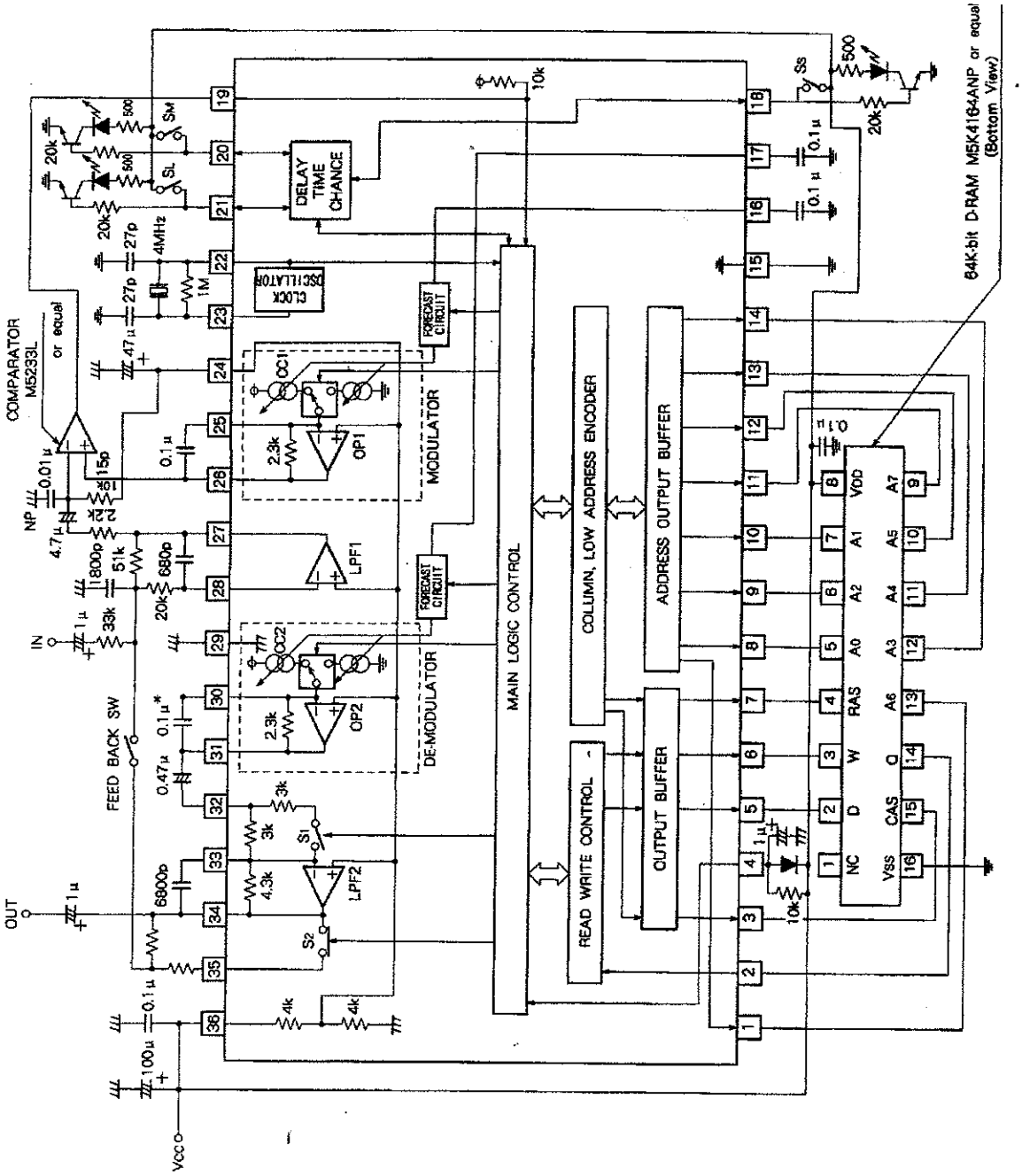

Units Resistance : Ω
Capacitance : F

CONVENTIONAL ANALOG DELAY

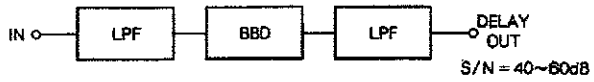

THE DELAY SYSTEM BY BBD

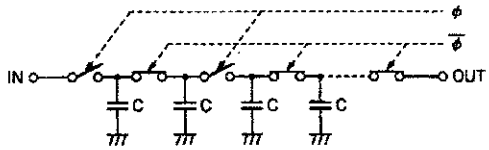

BBD

NEW TYPE DIGITAL DELAY

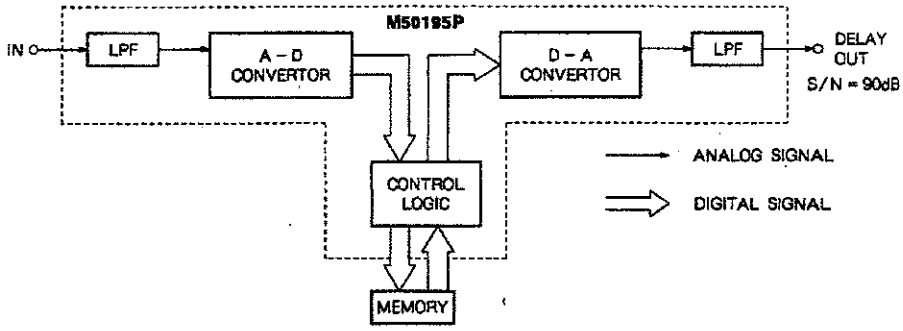

DIGITAL DELAY SYSTEM